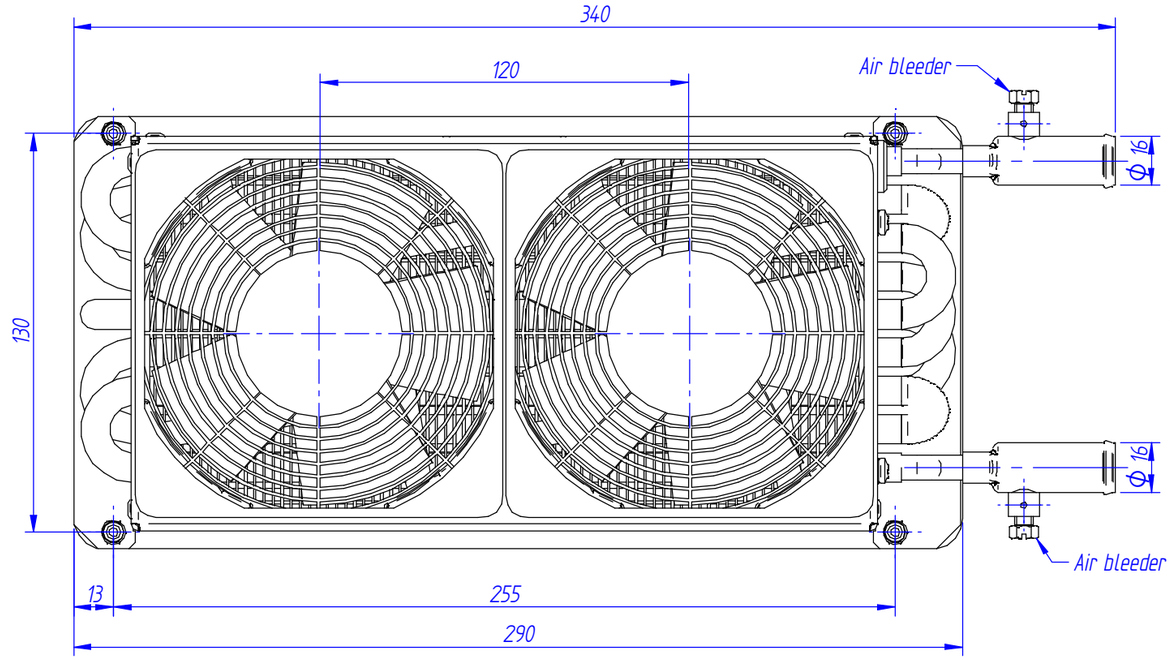

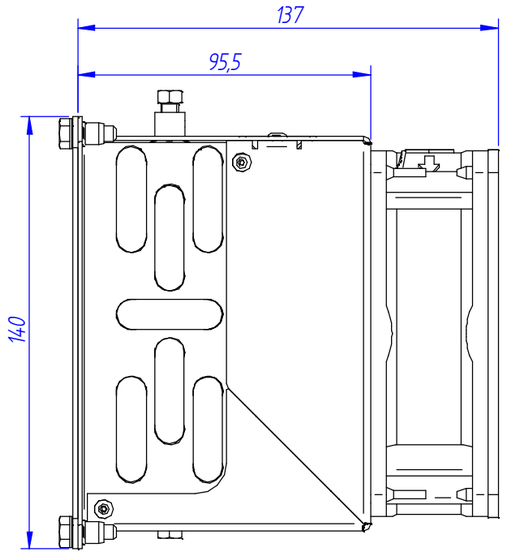

MANUFACTURER PART NUMBER: 8.303.121.860

SPECIFICATIONS:

1.0 REFRIGERANT TYPE:.....–
2.0 MATERIAL GRADE:..... See sheet 2
3.0 MATERIAL FINISH:.....Aluminum
4.0 MAXIMUM COOLING CAPACITY (kW – Q0):.....–
5.0 MAXIMUM HEATING CAPACITY (kW – Q100):.....4
6.0 MAXIMUM AIR FLOW RATE (m³/h):.....250
7.0 MAXIMUM OPERATING TENSION (VDC): 28
8.0 MAXIMUM OPERATING CURRENT (A at 26VDC):.....1
9.0 UNIT WEIGHT (kg):.....–
10.0 BLOWER'S CONTROL TYPE:.....E
A – 1 SPEED.
B – 2 SPEEDS BY SERIES RESISTOR.
C – 3 SPEEDS BY SERIES RESISTOR.
D – PROGRESSIVE CONTROL BY ELECTRONIC SYSTEM.
E – 2 SPEEDS.
11.0 WATER VALVE'S CONTROL TYPE:.....–
A – PROGRESSIVE CONTROL BY MANUAL ACTION.
B – OPEN/CLOSE BY ELECTRIC ACTION.
C – PROGRESSIVE CONTROL BY ELECTRONIC SYSTEM.
12.0 WIRING DIAGRAM:.....–
13.0 MARKING:..... SEE DRAWING

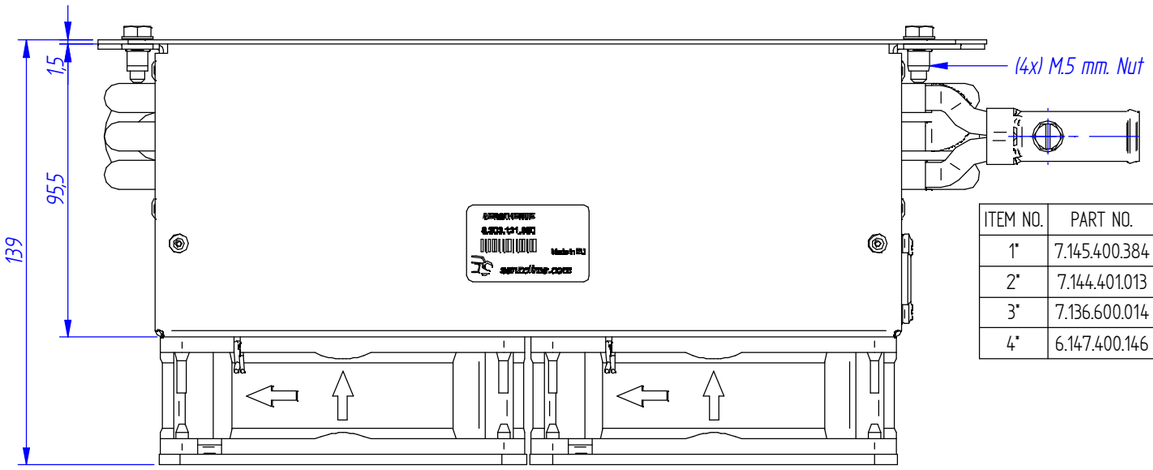

ITEM NO.	PART NO.	PART NAME	QUANTITY
1*	7.145.400.384	RADIATOR	1
2*	7.144.401.013	ELECTRICAL HARNESS	1
3*	7.136.600.014	AXIAL FAN 24V.	2
4*	6.147.400.146	GRID FAN	2

INSTALLATION CONNECTOR ELECTRICAL HARNESS DIN 72551 FLRY-B

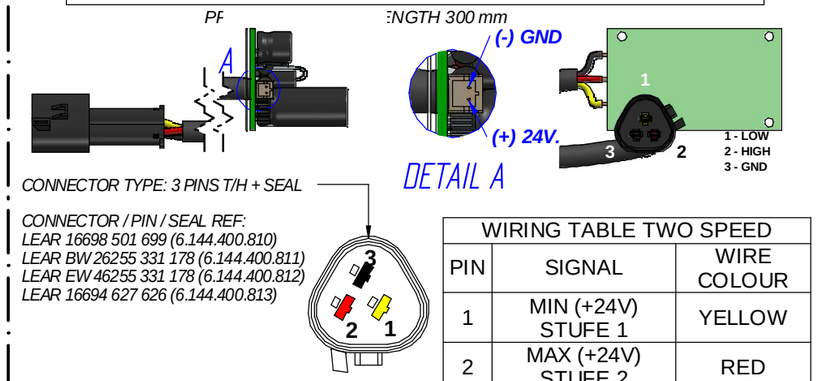

WIRING TABLE TWO SPEED

PIN	SIGNAL	WIRE COLOUR
1	MIN (+24V) STUFE 1	YELLOW
2	MAX (+24V) STUFE 2	RED
3	GND MASSE	BLACK

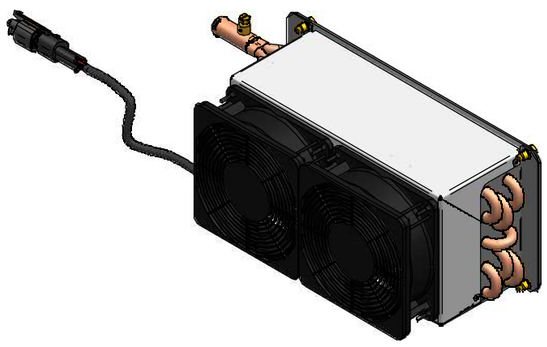

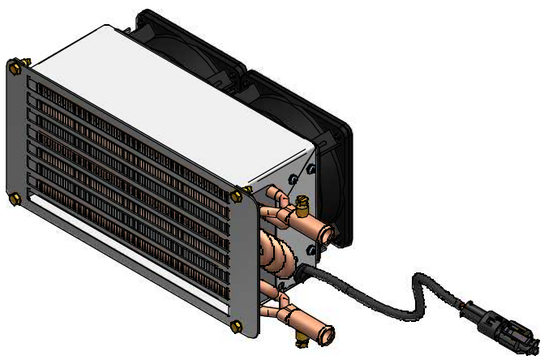

THIS DOCUMENT IS SUPPLIED, DESIGNED AND DOCUMENTED ON SANZ CLIMA FORMAT. THE ORIGINAL IS ON FILE AT SUPPLIER LOCATION. THE SUPPLIER IS RESPONSIBLE FOR PROVIDING SANZ CLIMA REVISION "FILE PRINT" FOR INTERNAL DISTRIBUTION.

NO DEVIATION FROM THE CONSTRUCTION DEFINED BY AN APPROVED SAMPLE OR DETAILED SPECIFICATION (ON FILE IN SANZ CLIMA ENGINEERING DEPARTMENT) WILL BE MADE WITHOUT APPROVAL FROM SANZ CLIMA.

SYM	REVISION RECORD	DATE	BY	ENGR.	M.E.	NPCA NO.
A	REVISED INITIAL RELEASE	10/03/2020	J.H.G	C.P.G.	C.P.G.	-

CAD SYSTEM: Solid Edge

UNLESS OTHERWISE SPECIFIED ALL DIMENSIONS SHOWN ARE MILLIMETERS, WITH IMPERIAL CONVERSIONS IN [INCHES].

FIRST ANGLE PROJECTION

UNLESS OTHERWISE SPECIFIED TOLERANCES ON:

Precision Rate	more than 0,5 to 3	more than 3 to 6	more than 6 to 30	more than 30 to 120	more than 120 to 315	more than 315 to 1000	more than 1000 to 2000	more than 2000 to 4000
fine	±0,05	±0,05	±0,1	±0,15	±0,2	±0,3	±0,5	±0,8
medium	±0,1	±0,1	±0,2	±0,3	±0,5	±0,8	±1,2	±2
gross	±0,15	±0,2	±0,5	±0,8	±1,2	±2	±3	±4
very gross	-	±0,5	±1	±1,5	±2	±3	±4	±6

MATERIAL:

TREATMENT: -

SURFACES	HOLE DIA. H13 AXEL DIA. h13 THREAD SH8	HOLE SPACING ± 0.4 ±[.015] NON-CUMULATIVE	HOLE LOC ± 0.2 ±[.0078]
√AA			

QUANTITY: 1 | RIGHT: - | LEFT: -

WEIGHT: | MFG/PURCH: -MFG

DIMENSIONS IN (PARENTHESIS) ARE FOR INFORMATION ONLY. TOLERANCES DO NOT APPLY.

SANZ clima
Leader in HVAC Systems and innovation
www.sanzclima.com
C/ Ingeniero Torres Quevedo 6
28022 Madrid, Spain
Phone +34 91 761 38 34
Fax +34 91 747 83 34
mail@sanz.eu

THIS DOCUMENT AND THE INFORMATION CONTAINED THEREIN IS PROPRIETARY TO SANZ CLIMA CORPORATION AND SHALL NOT BE USED OR DISCLOSED TO OTHERS, IN WHOLE OR IN PART, WITHOUT THE WRITTEN AUTHORIZATION OF SANZ CLIMA CORPORATION.

APPLICATION: 8.303.121.860

TITLE: AEROTHERME

SIZE	DRAWING NO.	REV
A3	8.303.121.860 SHEET - OF -	A

NEXT DRAWING: | SCALE: 1:2

REV.: A

DWG NO.: 8.303.121.860

COMMODITY CODE:

DO NOT REVISE THIS DRAWING WITHOUT REFERRING TO MODEL: | SUPERSEDES: | SIMILAR TO: | PRINT DISTRIBUTION: