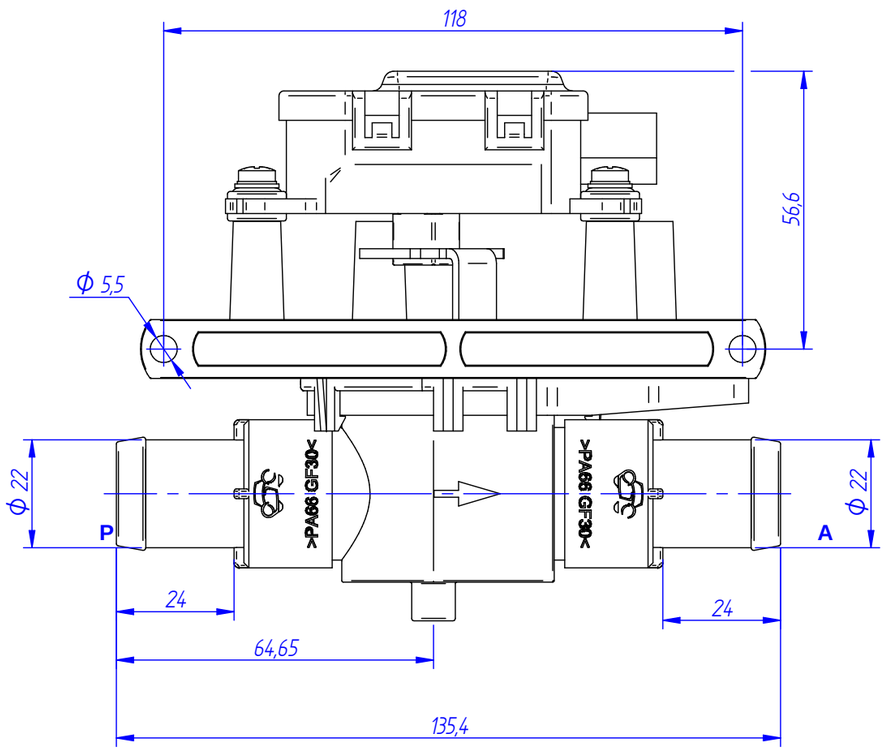

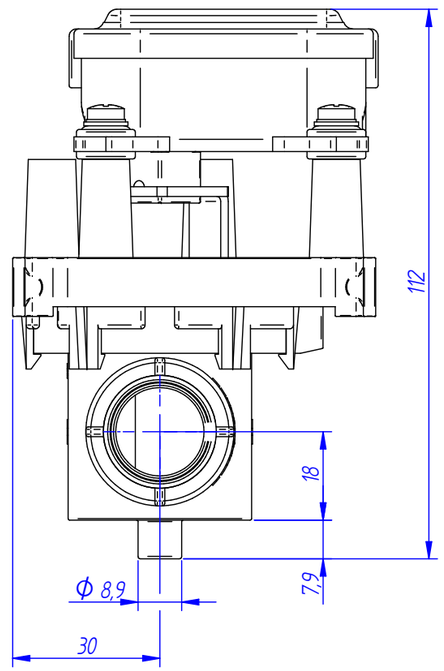

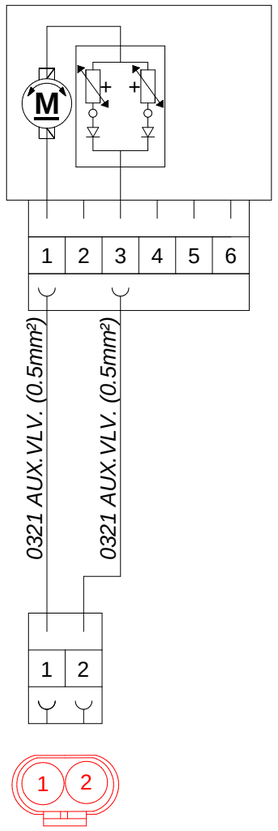

Clockwise: 1 to (+), 3 to (-); Open
Counterclockwise: 1 to (-), 3 to (+); Close

Nominal voltage: 24V.
Direction of rotation: R/L.
Weight: approx. 0,32 Kg.

Symbol Circuit

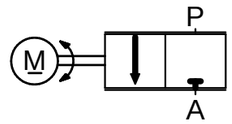

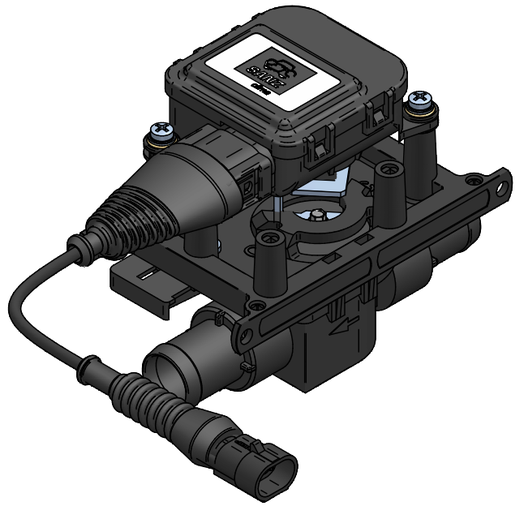

ISOMETRIC VIEW
1:2

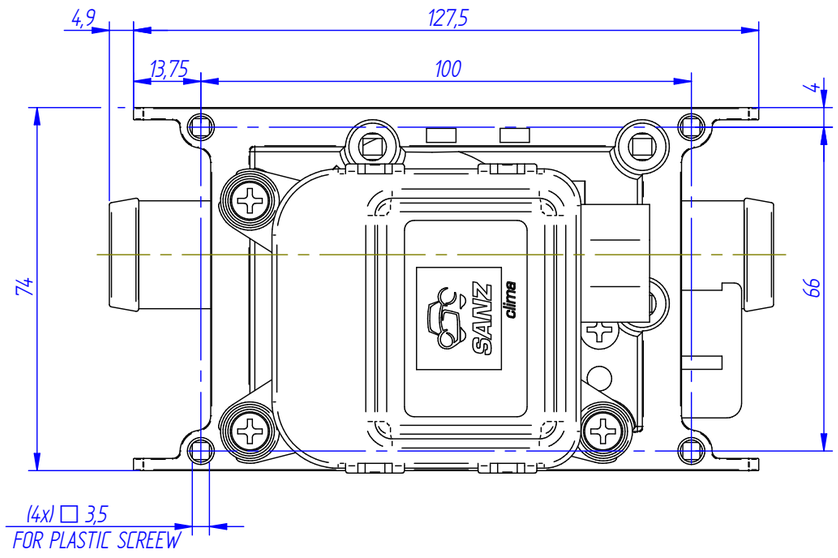

TO INSTALL BY BODYBUILDER

CONNECTOR(x1): AMP 282080-1
2 PINS R/H
(6.144.400.583)

TERMINAL(x2): AMP 282110-1 (Ø0,75-1,5mm²)
(6.144.400.584)

SEAL(x2): AMP 281934-3
(6.144.400.512)

ITEM NO.	PART NO.	PART NAME	QUANTITY	DESCRIPTION
1	7.147.400.308	MOTORIZED TAP	1	ON/OFF
2	7.144.401.145	ELECTRICAL HARNESS	1	ON/OFF WATERPROOF

THIS DOCUMENT IS SUPPLIED, DESIGNED AND DOCUMENTED ON PEDRO SANZ CLIMA FORMAT. THE ORIGINAL IS ON FILE AT SUPPLIER LOCATION. THE SUPPLIER IS RESPONSIBLE FOR PROVIDING PEDRO SANZ CLIMA REVISION "FILE PRINT" FOR INTERNAL DISTRIBUTION.

NO DEVIATION FROM THE CONSTRUCTION DEFINED BY AN APPROVED SAMPLE OR DETAILED SPECIFICATION (ON FILE IN PEDRO SANZ CLIMA ENGINEERING DEPARTMENT) WILL BE MADE WITHOUT APPROVAL FROM PEDRO SANZ CLIMA.

SYM	REVISION RECORD	DATE	BY	ENGR.	M.E.	NPCA NO.
A	REVISED INITIAL RELEASE	18/09/2019	A.M.M.	P.E.	P.E.	-

CAD SYSTEM: Solid Edge

UNLESS OTHERWISE SPECIFIED ALL DIMENSIONS SHOWN ARE MILLIMETERS, WITH IMPERIAL CONVERSIONS IN [INCHES].

FIRST ANGLE PROJECTION

UNLESS OTHERWISE SPECIFIED TOLERANCES ON: GROSS

Precision Rate	more than 0,5 to 3	more than 3 to 6	more than 6 to 30	more than 30 to 120	more than 120 to 315	more than 315 to 1000	more than 1000 to 2000	more than 2000 to 4000
fine	±0,05	±0,05	±0,1	±0,15	±0,2	±0,3	±0,5	±0,8
medium	±0,1	±0,1	±0,2	±0,3	±0,5	±0,8	±1,2	±2
gross	±0,15	±0,2	±0,5	±0,8	±1,2	±2	±3	±4
very gross	-	±0,5	±1	±1,5	±2	±3	±4	±6

MATERIAL:

TREATMENT: -

QUANTITY: 1 — RIGHT: - — LEFT: -

WEIGHT: — MFG/PURCH: -MFG

SURFACES: √AA

HOLE DIA. H13 — AXEL DIA. h13 — THREAD SH8

HOLE SPACING ± 0.4 ±[.015] NON-CUMULATIVE

HOLE LOC ± 0.2 ±[.0078]

DIMENSIONS IN (PARENTHESIS) ARE FOR INFORMATION ONLY. TOLERANCES DO NOT APPLY.

PEDRO SANZ clima
Heating Systems for Vehicles
www.pedrosanz.com
Av. Ingeniero Torres Quevedo 6
28022 Madrid, Spain
Phone +34 91 761 38 34
Fax +34 91 747 83 34
correo@pedrosanzclima.com

THIS DOCUMENT AND THE INFORMATION CONTAINED THEREIN IS PROPRIETARY TO PEDRO SANZ CLIMA CORPORATION AND SHALL NOT BE USED OR DISCLOSED TO OTHERS, IN WHOLE OR IN PART, WITHOUT THE WRITTEN AUTHORIZATION OF PEDRO SANZ CLIMA CORPORATION.

APPLICATION: 8.004.121.711

TITLE: MOTORIZED VALVE ON/OF + E.H.

SIZE: A3 — DRAWING NO.: 7.147.400.541 — SHEET - OF - — REV: A

NEXT DRAWING: — SCALE: 1:1,25

REV.: A

DWG NO.: 7.147.400.541

COMMODITY CODE:

DO NOT REVISE THIS DRAWING WITHOUT REFERRING TO MODEL: — SUPERSEDES: — SIMILAR TO: — PRINT DISTRIBUTION: